Item E

A-16-48

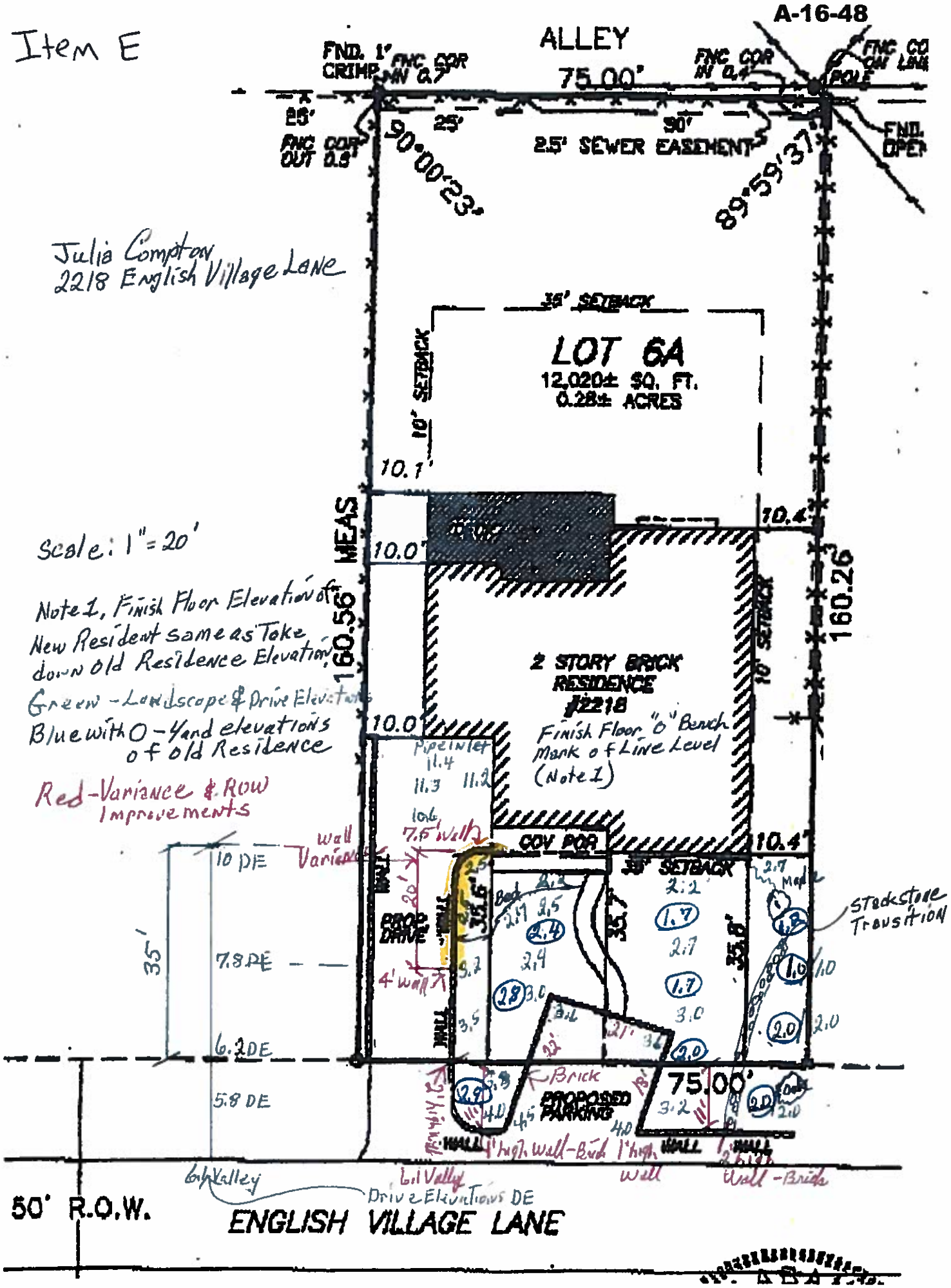
ALLEY
75.00'
FND. 1" CRIMP
FNC COR IN 0.7'
FNC COR IN 0.4'
FND. OPEN
25'
25'
30'
FNC COR OUT 0.8'
90°00'23"
2.5' SEWER EASEMENT
89°59'37"
Julia Compton
2218 English Village Lane
35' SETBACK
LOT 6A
12,020± SQ. FT.
0.28± ACRES
10' SETBACK
10.1'
10.4'
10.0'
MEAS
160.56'
160.26'
Scale: 1" = 20'
Note 1, Finish Floor Elevation of New Resident same as Take down old Residence Elevation
Green - Landscape & Drive Elevations
Blue with 0-Yard elevations of old Residence
Red - Variance & ROW Improvements
2 STORY BRICK RESIDENCE #2218
Finish Floor "0" Bench Mark of Line Level (Note 1)
Pipe Inlet
11.4
11.3
11.2
10.6
7.5' wall
wall Variance
COV POR
10.4'
35' SETBACK
10 DE
7.8 DE
6.2 DE
5.8 DE
35'
DROP DRIVE
4' wall
Stack Stone Transition
Brick
PROPOSED PARKING
75.00'
1' high wall - Brick
1' high wall
Wall - Brick
6" Valley
6" Valley
Drive Elevations DE
50' R.O.W.
ENGLISH VILLAGE LANE

Item B

A-16-48

*** NOT A PERMIT COPY ***

IMPORTANT INFORMATION
PLEASE READ CAREFULLY
**** BEFORE STARTING CONSTRUCTION ****

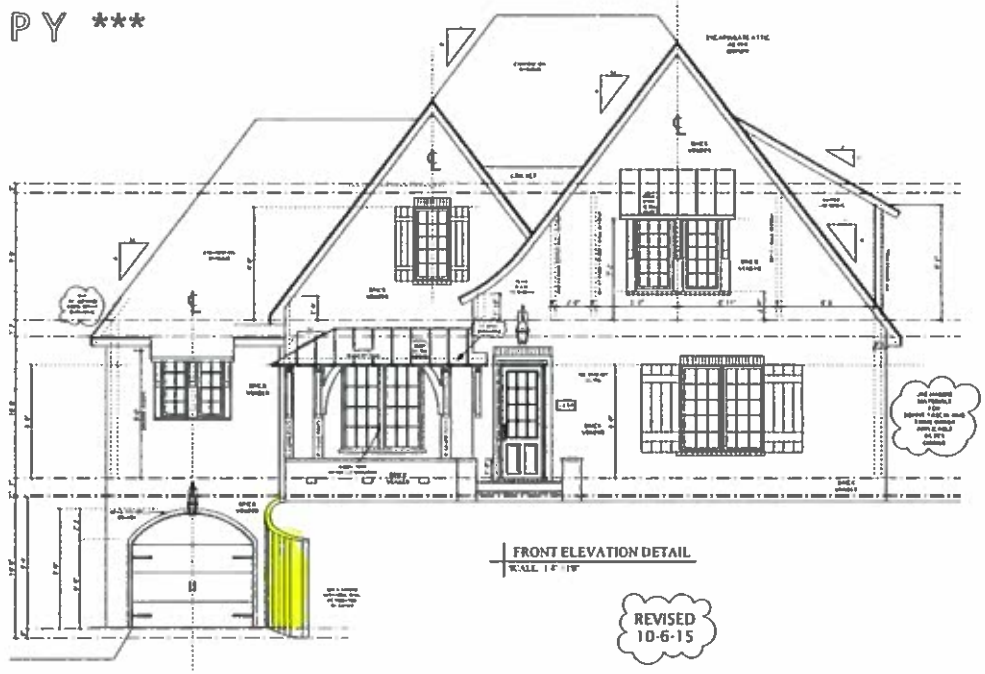

FRONT ELEVATION DETAIL
SCALE: 1/4"=1'0"

REVISED
10-6-15

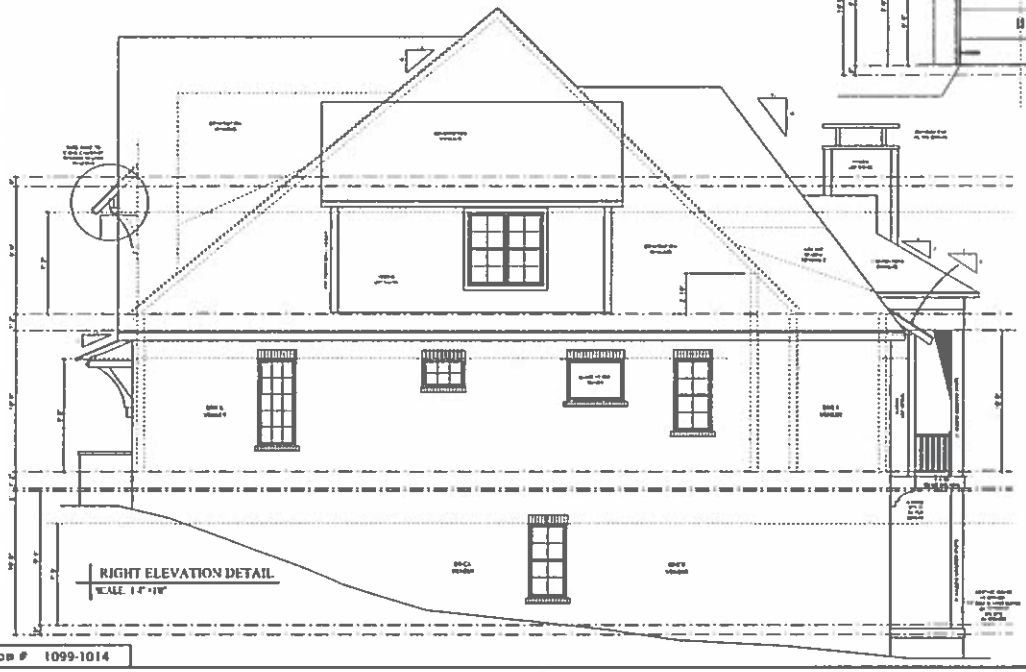

RIGHT ELEVATION DETAIL
SCALE: 1/4"=1'0"

IMPORTANT NOTES:

SCALE ALL STUCCO DETAILS FROM THE ELEVATION DRAWINGS

REFERENCE ROOF LAYOUT FOR DIFFERENT OVERHANG DEPTHS

NOTED DIFFERENT GABLE WALL HEIGHTS FOR HOUSE PROPORTIONS

REFERENCE ALL WINDOWS ON FLOORPLAN WITH ELEVATIONS & NOTIFY OWNER AND/OR DESIGNER OF ANY DISCREPANCIES BEFORE ORDERING WINDOW PACKAGE

** NOTED WINDOW SIZES AS SHOWN ON THIS PLAN MAY VARY WITH DIFFERENT MANUFACTURER'S WINDOW SIZES

CHANGE IN WINDOW SILLS SHOULD CLOSELY MATCH WINDOWS SHOWN ON ELEVATIONS.

IMPORTANT: NOTES ON HOME IMPROVEMENTS

- CONSTRUCT ALL SILLS, ROOF BEAMERS, HEADERS AND WINDOW HEIGHTS AS SHOWN FOR PROPER PROPORTION
- SCALE ALL STUCCO DETAIL FROM ELEVATION PAGES
- REFERENCE ROOF LAYOUT FOR DIFFERENT OVERHANG DEPTHS
- NOTED DIFFERENT GABLE WALL HEIGHTS FOR HOUSE PROPORTIONS.
- REFERENCE ALL ELEVATION WINDOWS WITH FLOORPLAN WINDOWS SHOWN ON ELEVATION ARE PREFERRED.

** NOTED WINDOW SIZES AS SHOWN ON THIS PLAN MAY VARY WITH DIFFERENT MANUFACTURER'S WINDOW SIZES

CHANGE IN WINDOW SILLS SHOULD CLOSELY MATCH WINDOWS SHOWN ON ELEVATIONS.

PROPERTY OF FRUSTERIO

AMERICAN INSTITUTE OF BUILDING DESIGN
AIBD PROFESSIONAL MEMBER

CUSTOM HOME DOCUMENTS FOR COLONIAL RESIDENCE

frusterio

DESIGN DATE: 09/09/2015 1:30 AM

SHEET #

1099-1014

JOB # 1099-1014

© COPYRIGHT FRUSTERIO 1999-2015
ALL RIGHTS RESERVED

FEDERAL COPYRIGHT REGISTERED
BUILDING PERMIT
COPYRIGHT WARNING

THIS PLAN AND ITS DESIGN COMPOSITION IS PROTECTED UNDER FEDERAL COPYRIGHT LAWS AND ENFORCED BY COPYRIGHT ATTORNEYS SIMOTE & PERNUTT P.C. BIRMINGHAM, ALABAMA

1982-2015 FRUSTERIO
IGHTS RESERVED

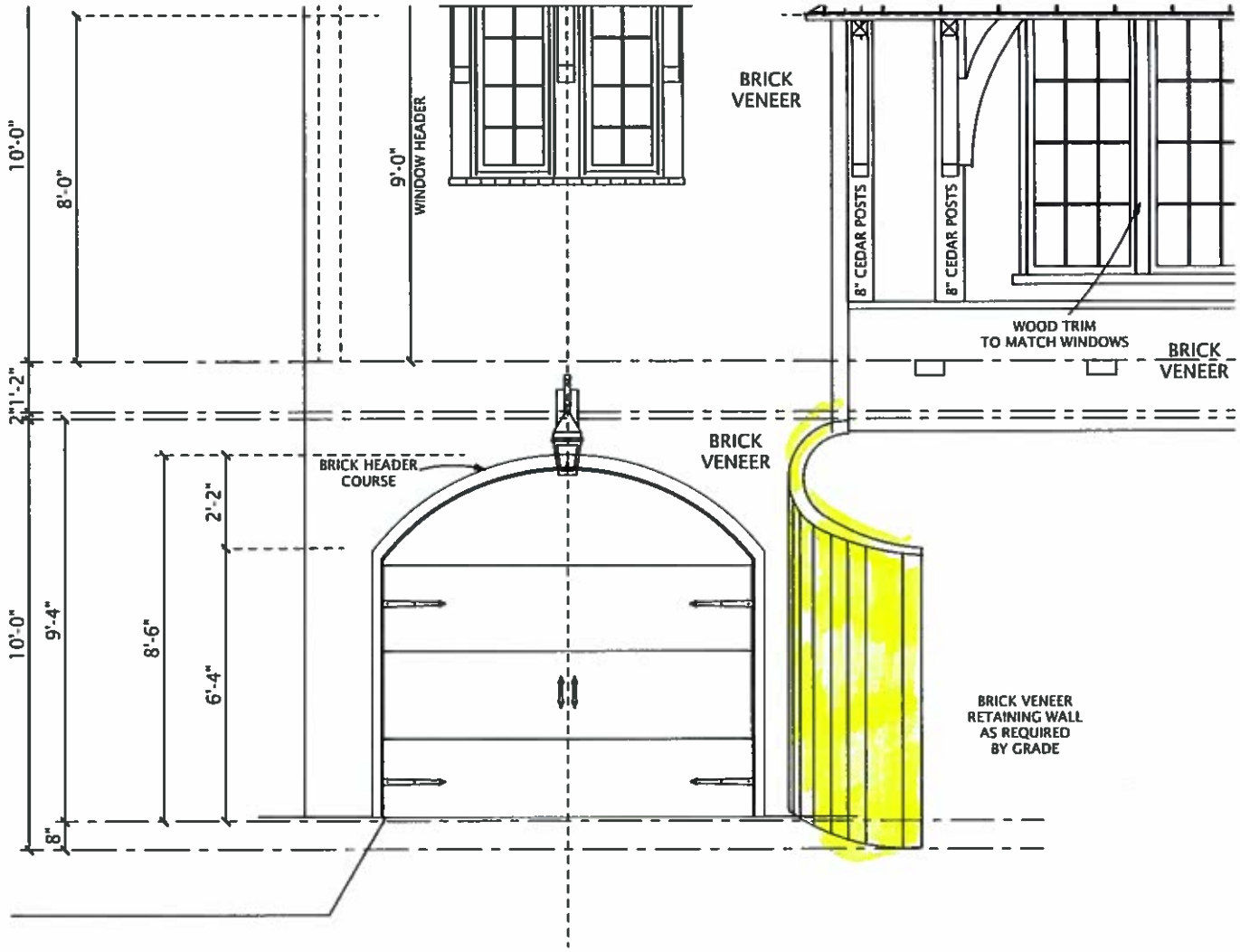

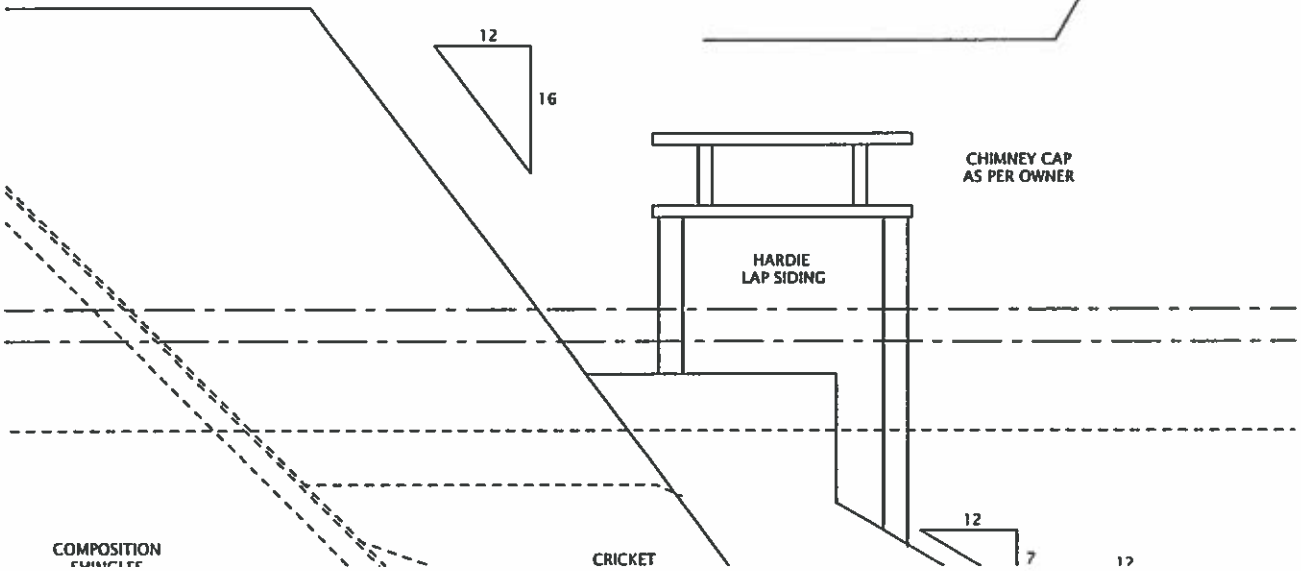

SCAI
ELEV

REFE
OVEI

NOTI
HOUS

REFEI
WITH
DESIC

A-16-48

Item C

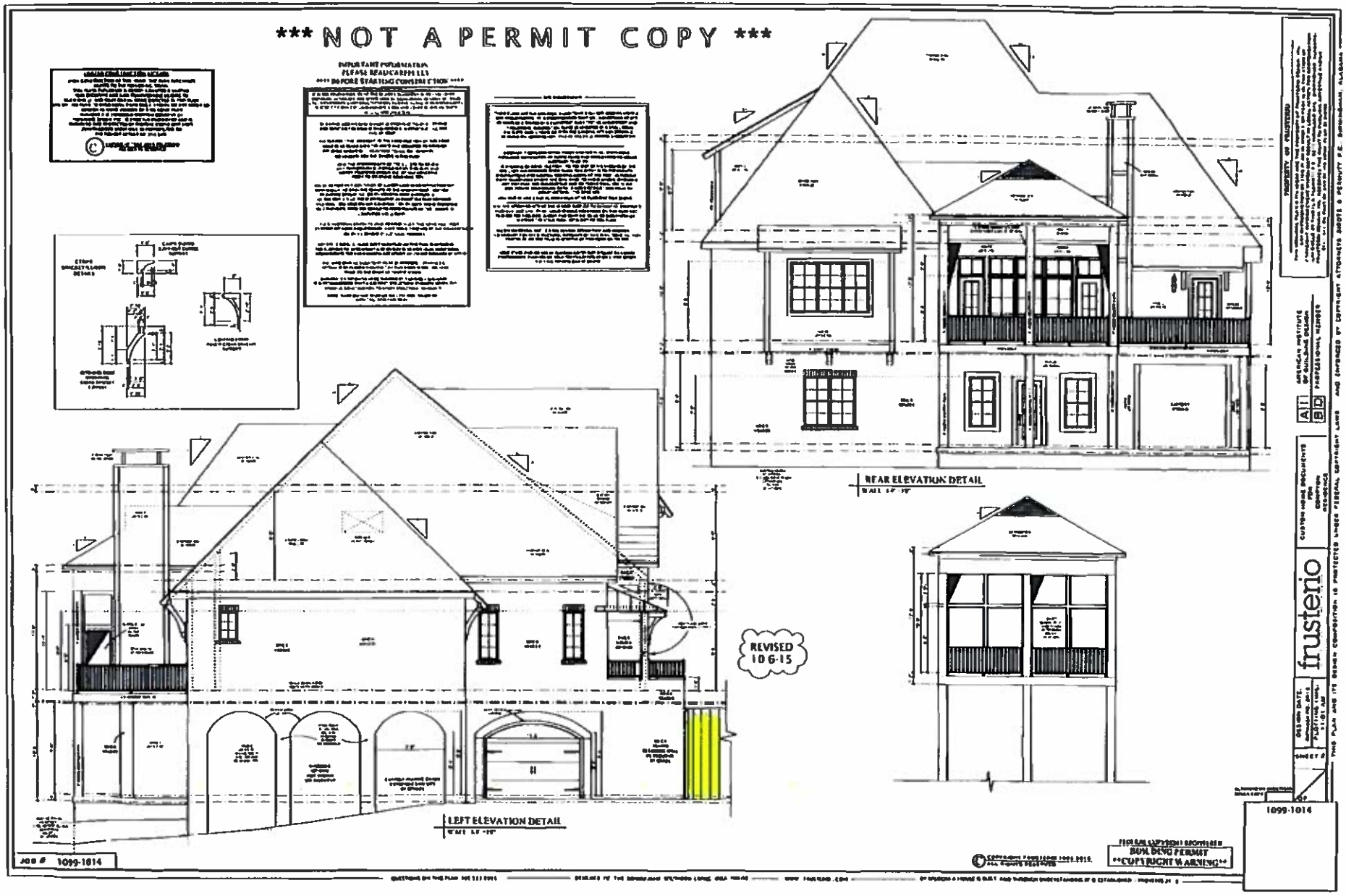
NOT A PERMIT COPY
REAR ELEVATION DETAIL
LEFT ELEVATION DETAIL
REVISED 10-6-15
frusterio
1099-1014
JOB # 1099-1014